EMX 16.0.12.0

What's New?

Enhancement

- Update SmartHolechart to Version 16.0.12.0
- Implement Knarr sprue bushing 62408 and 62468

EMX 16.0.11.4

What's New?

Enhancement

- Meusburger components updated to state 6.2.16.0 Q-12026
- Add ISO 7380-2 flat head button screw

EMX 16.0.11.3

What's New?

Enhancement

- New Misumi components
  - EPB
  - M-120KOC
  - JTWS, JTW
  - ORP, ORG
  - SLLK
  - V-15-1A5-T
  - C-CVPL, M-RCC
  - WFH, WLH, WHH, WMH
  - E-DTBB, E-DTBBU, DTBX, DTBXU

EMX 16.0.11.2

What's New?

Enhancement

- New EMX Component Search
  → New Search is available in **EMX Components Ribbon → Find**

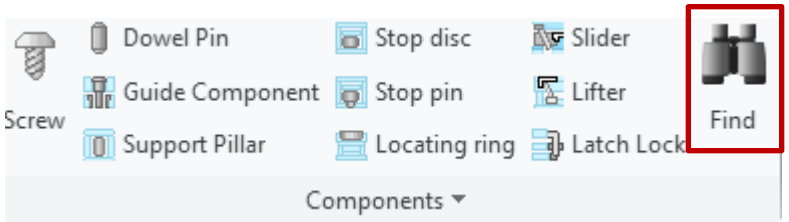

- Navigator contains:

Search results:

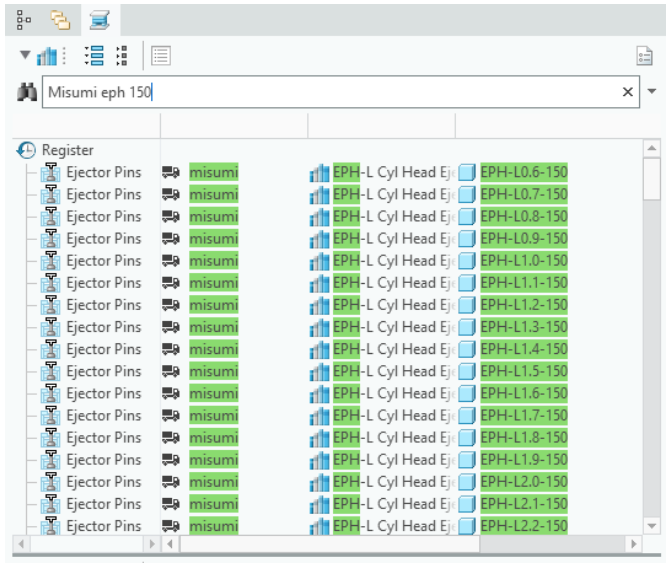

Favorites:

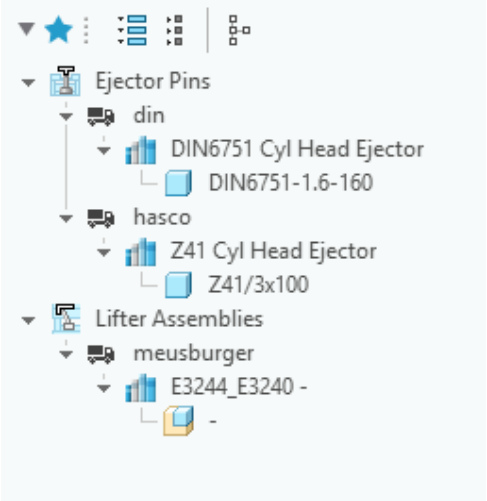

Favorites can also be added through Component Dialog

Enhancement

- New Meusburger cooling components E20761 and E20762
- Update existing Meusburger components to state 6.2.15.0
- Improved Bill of Material Excel export:
    - Allow Excel files with marcros (*.xlsm), templates (*.xltx) and templates with macros (*.xltm) for direct export from BOM.
    - Option EXCEL_TEMPLATE_PATH may point to a specific template file, for example: "%EMX_USER_CONFIG_PATH%configuration\bom-template.xlsm".
    - In this case export starts directly without showing a file browser. If necessary, option BOM_FILENAME will be used to generate a new file name for the Excel export.

EMX 16.0.11.0

What's New?

Enhancement

- New Knarr ejector pins 326121, 326121 DLC
- Update Knarr plates to state 2025
- Introduce new parameter default type &project_date to use the value defined in the project dialog

EMX 16.0.10.5

What's New?

Enhancement

- Predefined Components: Enable user to delete predefined auto screw and pin information from point.

- Component Editor Improvements:
    - Instance dimension can be added in case table cell is selected. It is not required to select column explicitly.
    - Part name rules: Side value can be selected from option menu.
    - Assembly references: Default reference value can be edited in table.

- Existing Meusburger components are updated to version 6.2.14.0 from November 2025.

- Meusburger web links support new Meusburger website.

EMX 16.0.10.4

What's New?

Enhancement

- Component Handling: Implement solution to delete only one component in case it was assemble multiple times.
- Situation: In case a component as create multiple times with “Reassemble component” or defined on a multiple point feature

→ Previous behavior: All components are deleted always

→ New behavior: It is possible to deleted only the selected instance

→ Delete all? No! → Only selected instances

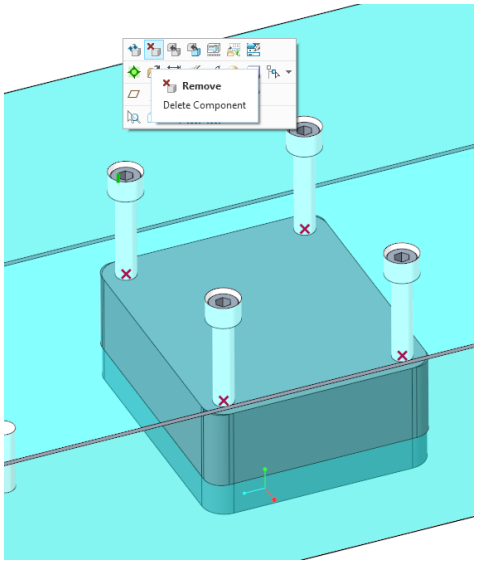

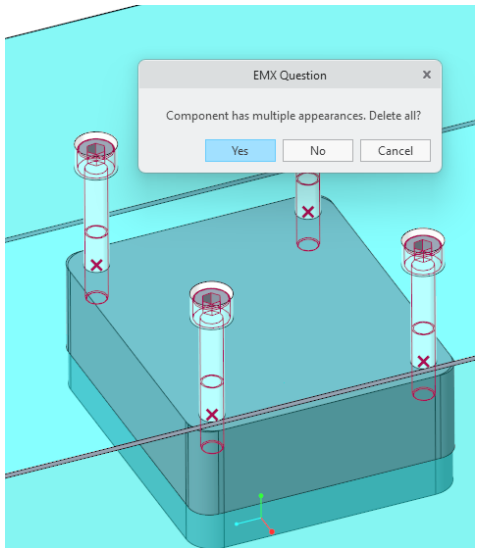

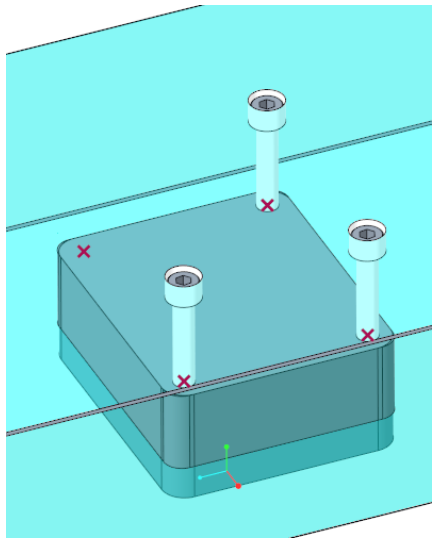

EMX 16.0.10.2

What's New?

Enhancement

- Component Dialog: Add right mouse button in nominal values and udf dimension table to set back manually edited values to default in edit fields and spin boxes.

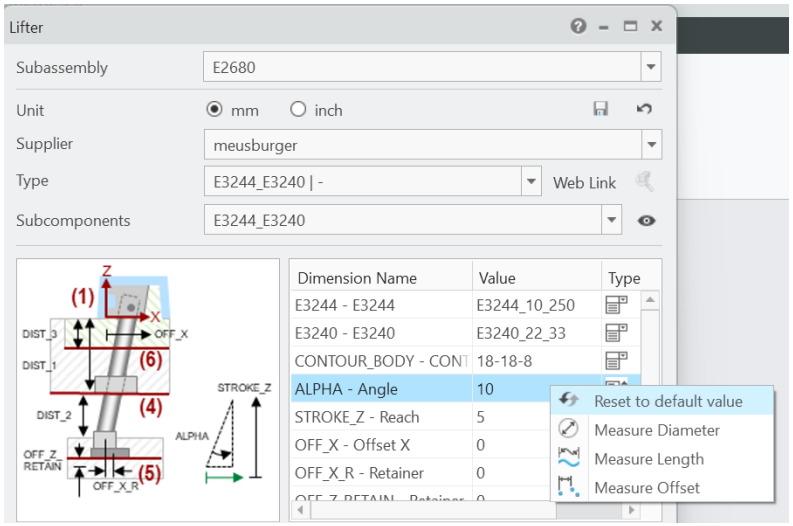

Nominal Value Table

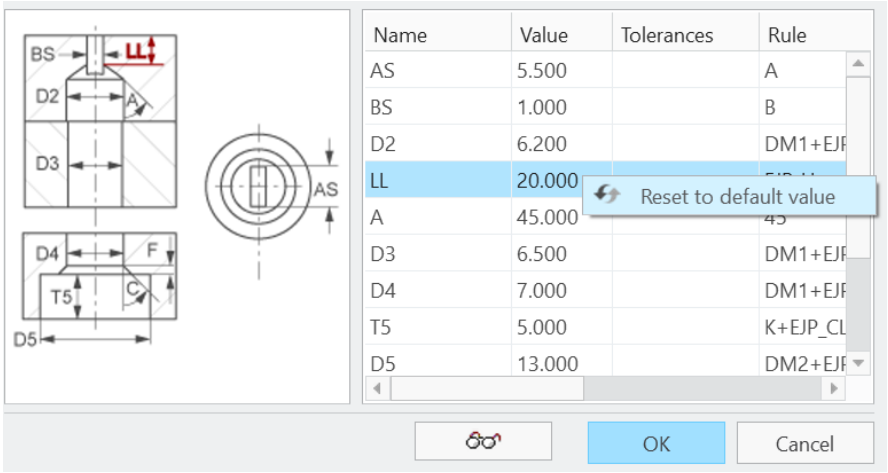

UDF Dimensions Table

Enhancement

- Component Editor: Add additional push buttons to component editor besides buttons on right mouse menu to improve usability.
  → Right-Mouse buttons still exist.

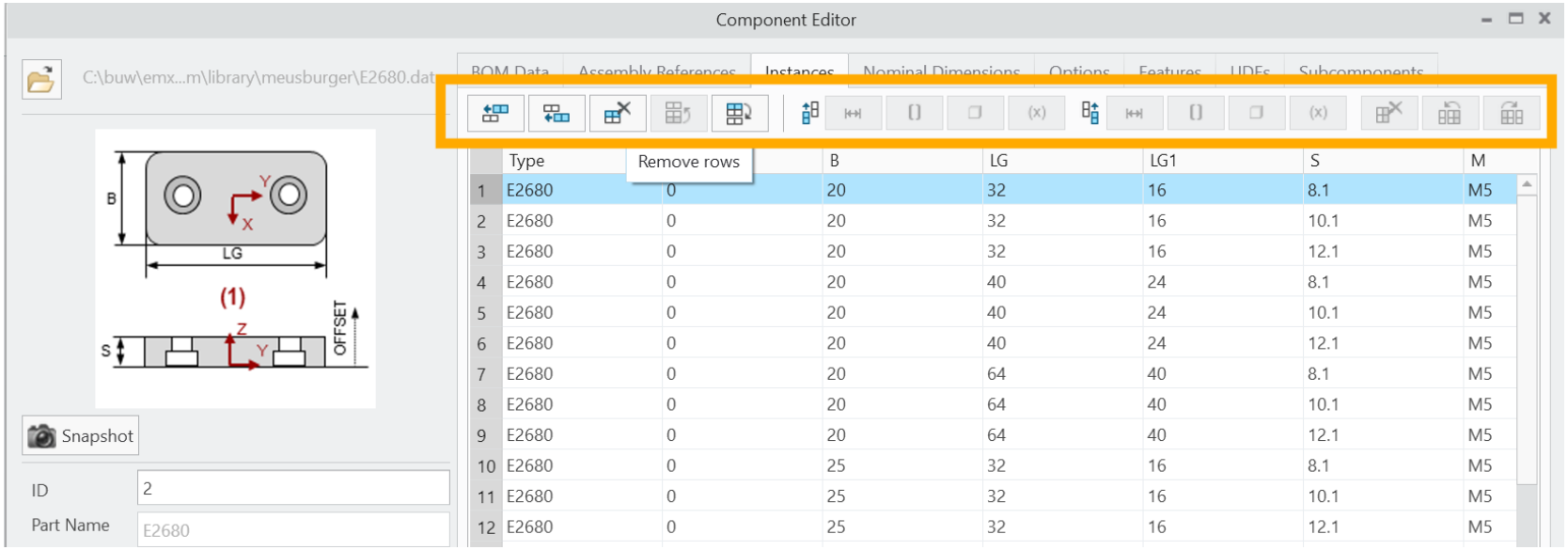

	Type		B	LG	LG1	S	M
1	E2680	0	20	32	16	8.1	M5
2	E2680	0	20	32	16	10.1	M5
3	E2680	0	20	32	16	12.1	M5
4	E2680	0	20	40	24	8.1	M5
5	E2680	0	20	40	24	10.1	M5
6	E2680	0	20	40	24	12.1	M5
7	E2680	0	20	64	40	8.1	M5
8	E2680	0	20	64	40	10.1	M5
9	E2680	0	20	64	40	12.1	M5
10	E2680	0	25	32	16	8.1	M5
11	E2680	0	25	32	16	10.1	M5
12	E2680	0	25	32	16	12.1	M5

Improvements

- Update existing Meusburger components to version 6.2.13.0
- Facelift for Wema and Ermanno Balzi cooling components.
  → Improve images and models
- “Remove all Ejector Pins” should not delete the return pin.
- Component Editor: Cut quilt can be selected from feature in model tree and not only from model in graphic window.

EMX 16.0.10.0

What's New?

Enhancement

- Configuration option EJP_ENGRAVED_TEXT_SKETCH_TYPE:
  Add additional selectable options to suppress the solid text cutout and only show curves:
  a) contour_curve_text_only
  b) middleline_curve_text_only

- Implement HASCO cooling components Z814, Z878, Z8190, Z8190HT, Z8190HT-VA

- Implement KNARR ejector pins with ventilation 300133, 300133 DLC, 300533, 300533

- Update SMARTHolechart to version 16.0.10.0

EMX 16.0.9.0

What's New?

Enhancement

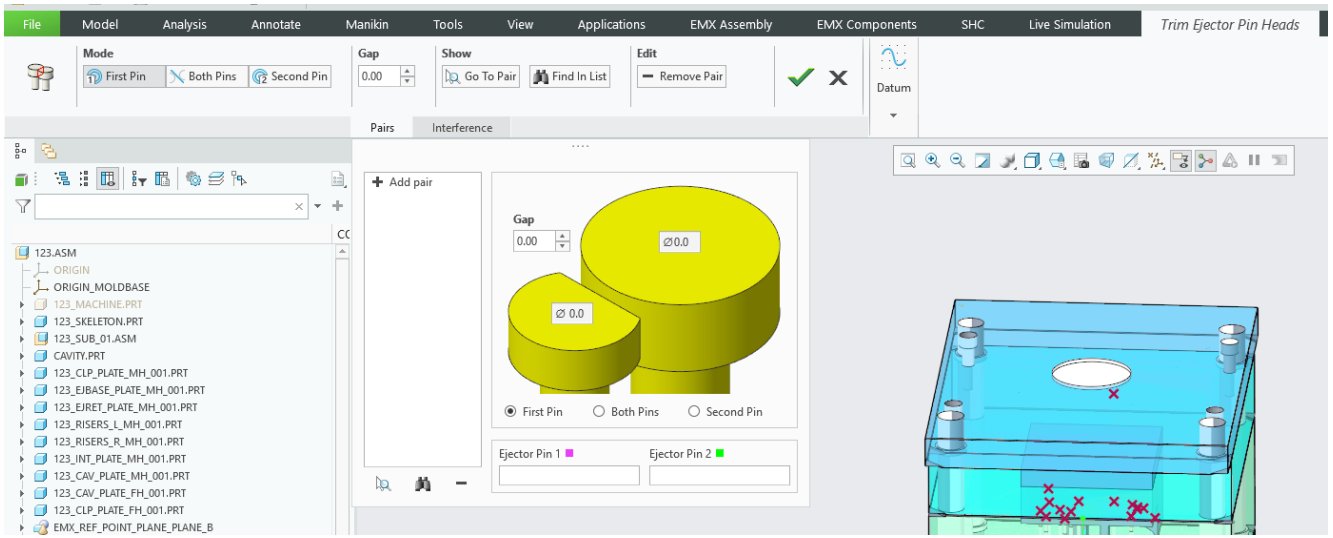

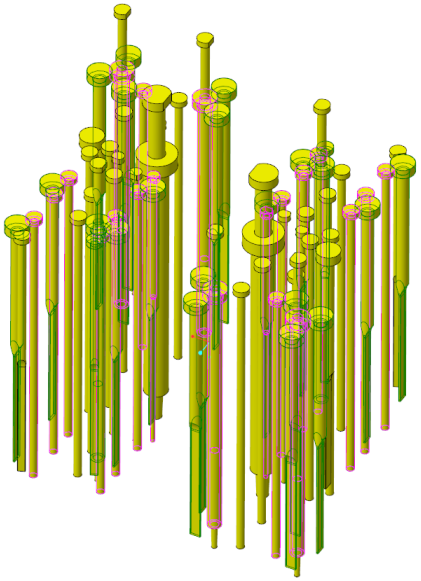

- Enhanced Trim Ejector Pin Heads capabilities
  - New Dashboard
  - Different trim shapes
  - Add and remove trim pairs
  - Manage existing pairs in list
  - Highlight pairs in 3D view

Enhancement

- Library components and related cutouts can be considered in Extract Fluid circuits command, in case parameter BELONGS_TO_WATERLINE=„YES“ exists at model.

- New Meusburger cooling components E2016, E20169, E20259, E2020HT, E2020 D and E20209HT

- Update all existing Meusburger components to state 6.2.11.0

- Improve performance of Excel export

EMX 16.0.8.1

What's New?

Enhancement

- Improve the Extract fluid circuit functionality
    1. Improve algorithm to detect related fluid bores
    2. Implement new radio group with option to assemble a subassembly for fixed and moving half, but also a part for each cooling circuit
    3. Use progress bar to avoid freezing of Creo window

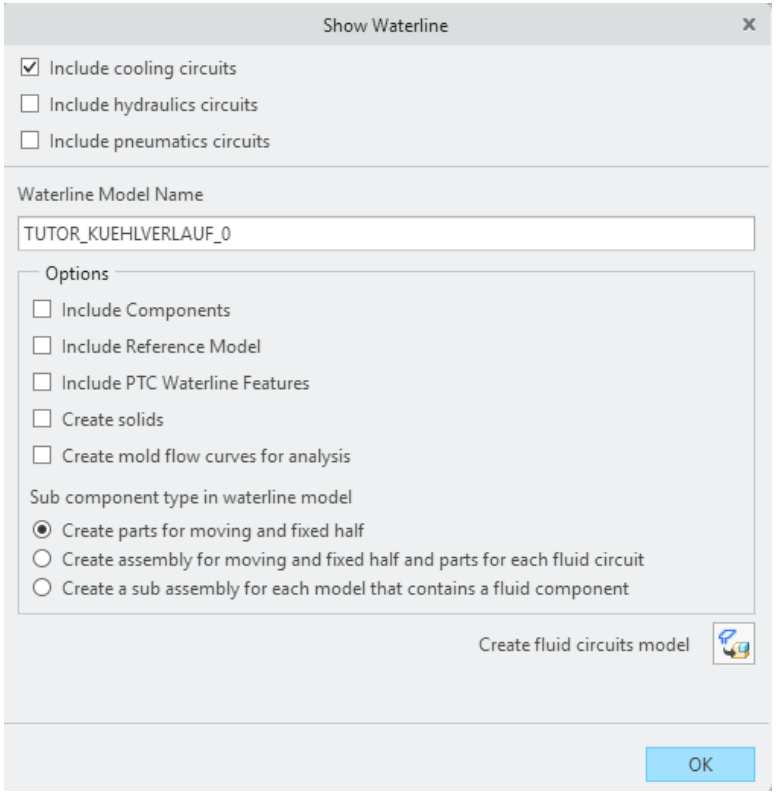

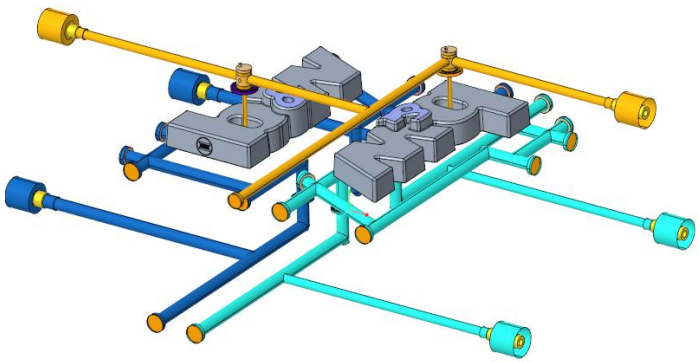

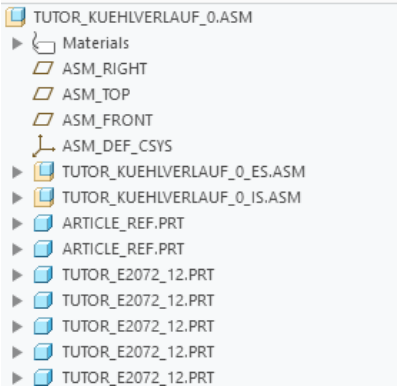

EMX 16.0.8.0

What's New?

Enhancement

- Implement solution to directly use measured values from Tiny Measure Tools in nominal values of component dialog

    1. Select dimension in nominal values table
    2. Open Tiny Measure Tools with Right Mouse Click
    3. Measure diameter, length or offset
    4. Best fit value will be used in nominal value table

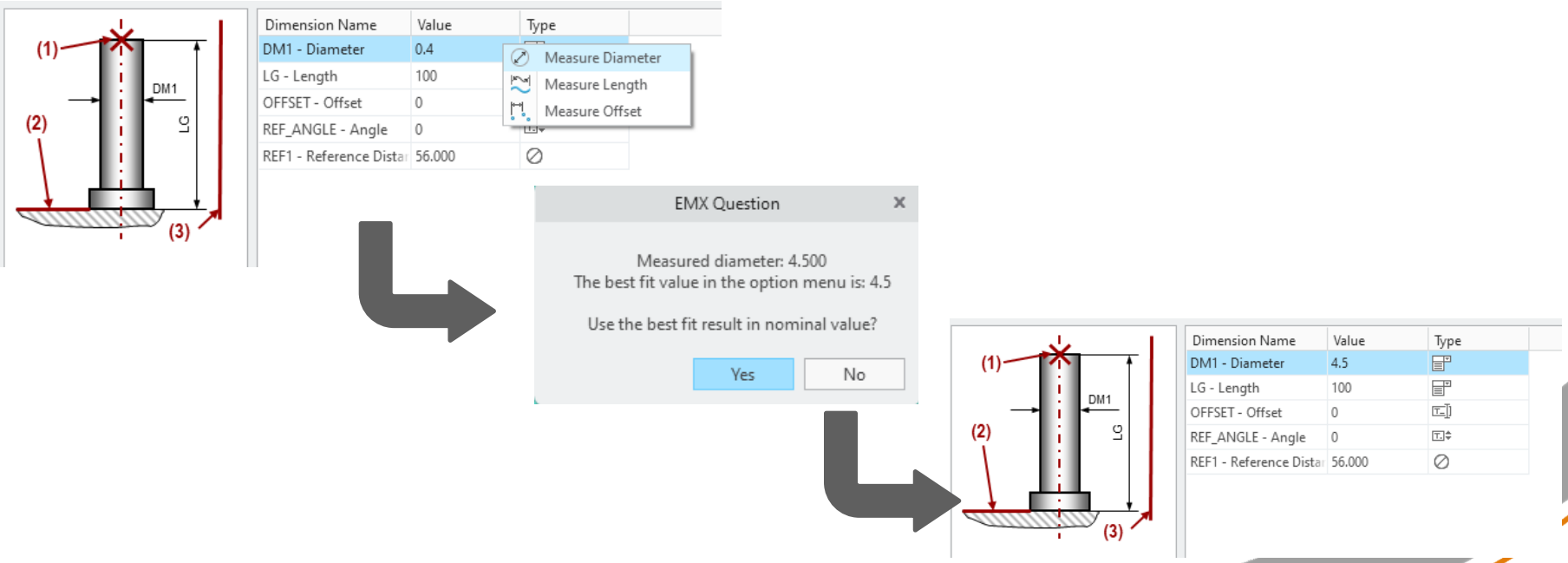

Enhancement

- Update SmartHolechart to Version 16.0.8.0
- New Components Meusburger Guide E1332 and E1146
- Implement new cooling O-rings from new suppliers Hagenauer and Arcus
- Add Ermanno Balzi cooling component TR, TRI, RF, RFP, RL, RLS

EMX 16.0.7.2

What's New?

Enhancement

New HASCO cooling components:

- Z87: Hose Nipple
- Z87VA: Hose Nipple, stainless steel
- Z9425: Sealing plug with O-Ring
- Z9425VA: Sealing plug with O-Ring, stainless steel
- ZI81: Hose Nipple, Open Flow, USA

Enhancement

- Implement new config option BOM_ALLOW_EDIT_PROJECT_PARAMS to allow manual editing of project parameters in BOM

Default Value is: NO

Behavior NO:
- Project parameters are disabled in Bill of Materials List.
- Value can not be edited
- Value is always overwritten from top assembly

Behavior YES:
- Project parameter can be edited in Bill of Materials
- Value needs to be unlocked in BOM

EMX 16.0.7.1

What's New?

Enhancement

- Introduce functionality to save configuration to current session only. “Current Session” can be selected in Options Dialog from option menu

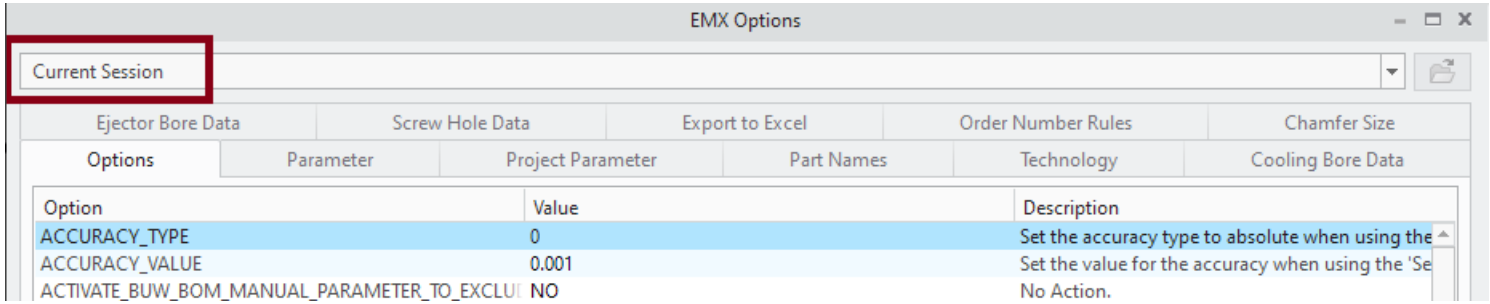

- Several minor fixes and internal improvements

EMX 16.0.7.0

What's New?

Enhancement

- Update Smart Holechart to Version 16.0.7.0
- Allow flexible items for guide components
- Several minor fixes and internal improvements

EMX 16.0.6.1

What's New?

Enhancement

- Several bug fixed
- Update SmartHolechart to Version 16.0.6.0

EMX 16.0.5.1

What's New?

Enhancement

- Update existing MEUSBURGER components to state April 2024
- Enhancements for Engraved Texts for ejector pins:
    - New Options EJP_ENGRAVED_TEXT_TYPE: Sketch can be created as contour or middle line.
    - Parameter defined in PARAM_EJP_ENGRAVED_TEXT will only be created at ejector pin models.

EMX 16.0.4.1

What's New?

Enhancement

New Feature: Assemble engraved texts for Ejector Pins

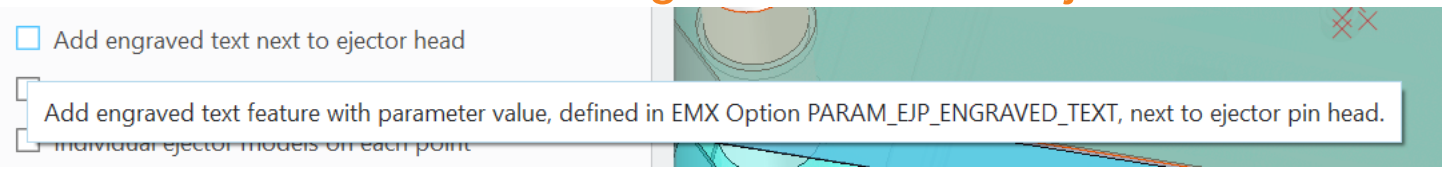

- New Option in Ejector Dialog: *Add engraved text next to ejector head*
- Text feature will be created in ejector model on head surface and next to head cutout UDF in plate.
- Text is controlled by relation and driven by a part parameter
- Part parameter must be defined with new Configuration Option *PARAM_EJP_ENGRAVED_TEXT* otherwise option in ejector dialog is disabled.
- New config file: *engraved_text_heights.cfg* to define valid text heights

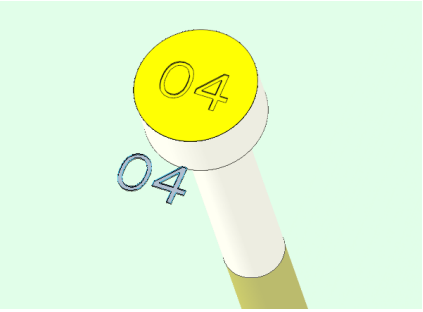

Enhancement

- Update existing HASCO components to state April 2024
- Update existing KNARR components to state April 2024
- Improve performance of additional chamfer creation in case of multiple point features.

EMX 16.0.4.0

What's New?

Enhancement

- Update existing Meusburger components to state January 2024

EMX 16.0.3.1

What's New?

Enhancement

- New Stäubli CBX and CBI connectors for Hydraulics
- Improved Stäubli RMI and CBI connectors in cooling

→ Overall improved functionality: Selectable option sealing and BF

- New Knarr Eyebolt screw 40811

EMX 16.0.3.0

What's New?

Enhancement

- New HASCO components:
  - Guide component: Z1300
  - Ejector Pins: DLC shouldered Z4430, cylindrical air-ventilated pin Z401
  - Top Interlocks: Cubic interlocks Z060 and Z080, spacer plate Z081.
  - Side Interlocks: Z085.
  - Attachment components: Flange Z167, Cycle Counters A5730, A5730HT, A57300, A57300HT, A5731, A5732

- Existing HASCO components updated to state of Summer 2023

Enhancement

- Component Editor: Enhanced functionality to edit subcomponent instances

→ Library Assemblies can be now fully defined in Component Editor.

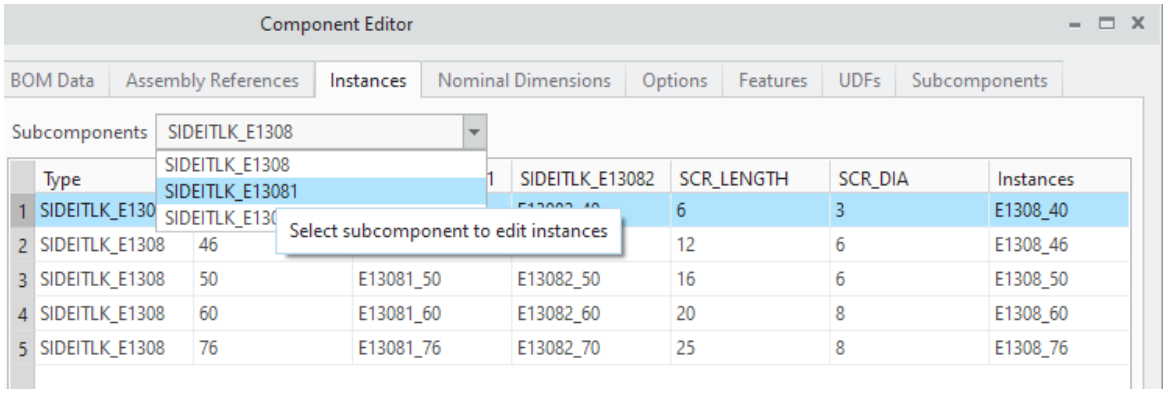

In case subcomponents exists selected from option menu.

EMX 16.0.2.0

What's New?

Enhancement

- EMX is integrated into Applications Group of Creo Parametric

EMX 16.0.0.0

What's New?

Enhancements

Compatible with new Creo 10.0.0.0